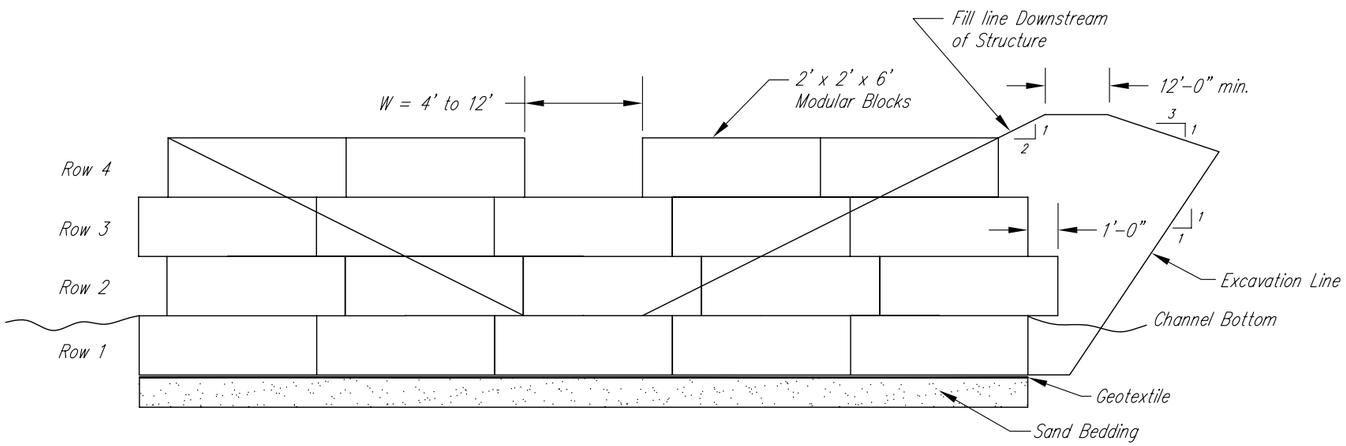

FRONT VIEW

(Looking Upstream)

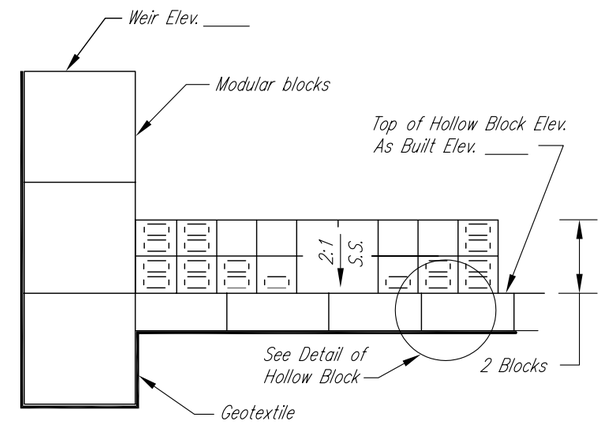

CENTERLINE CROSS-SECTION

QUANTITIES

Modular Concrete Block . . . . . .each _____
Hollow Concrete Block . . . . . each _____
Non-woven Geotextile . . . . . sq. yd. _____
Sand Bedding . . . . . cu. yd. _____

NOTES

1. Modular concrete blocks shall have a minimum concrete strength of 2000 psi.
2. Hollow concrete block – Concrete for blocks shall have a minimum density of 80 pcf.
3. Geotextile shall be non-woven, Class 1, (Constr. Spec. MI-165).
4. Fill voids in hollow blocks with MDOT 6A or 17A coarse aggregate or concrete grout.
5. Fill line upstream of structure to fit site conditions. Slopes must be 2H:1V or flatter.
6. Tile lines shall outlet downstream of structure.
7. Sand bedding provides a level surface for hollow block placement.

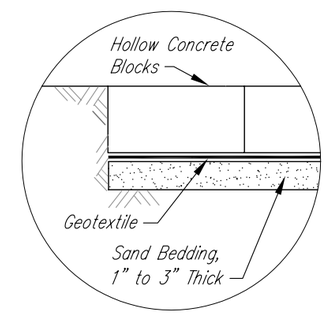

DETAIL OF HOLLOW BLOCK

DESIGN DATA AND BLOCK QUANTITIES					
	Q = 22 cfs W = 4'	Q = 34 cfs W = 6'	Q = 45 cfs W = 8'	Q = 57 cfs W = 10'	Q = 68 cfs W = 12'
Row 1	5	5	5	6	6
Row 2	5	5	5	6	6
Row 3	5	5	5	6	6
Row 4	4	4	4	4	4
Total	19	19	19	22	22

Note: Q assumes C = 3.1, 0.5 ft. freeboard

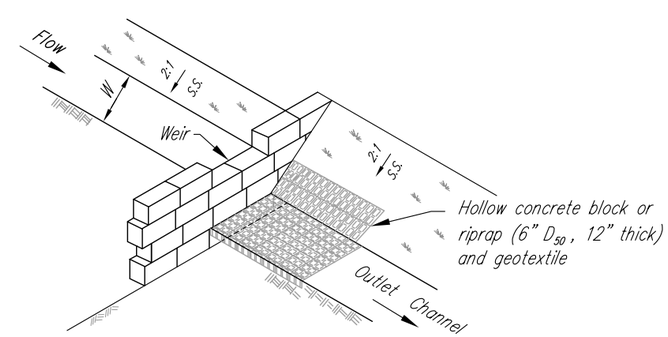

ISOMETRIC

NOT TO SCALE

Dimensions in inches or feet-inches

MICHIGAN ENGINEERING STANDARD DRAWING
FILE NAME MI-329-B 1-08.dwg
STANDARD DWG. NO. MI-329-B
DATE 1-08 SHEET 1 OF 1

Date
Designed
Drawn
Checked
Approved

LARGE MODULAR BLOCK DROP SPILLWAY

Township, T. –R. , Sec. Co., Michigan

NRCS
Natural Resources Conservation Service
United States Department of Agriculture

File Name
Drawing Name
Sheet of