Clear All | Print

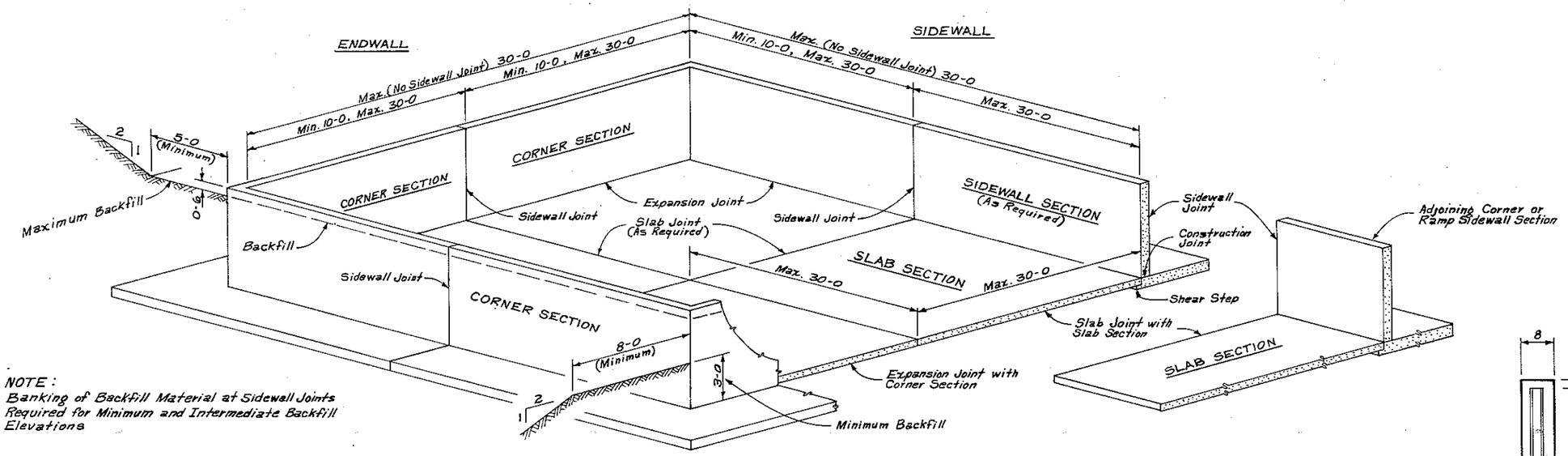

NOTE:
Banking of Backfill Material at Sidewall Joints Required for Minimum and Intermediate Backfill Elevations

ISOMETRIC

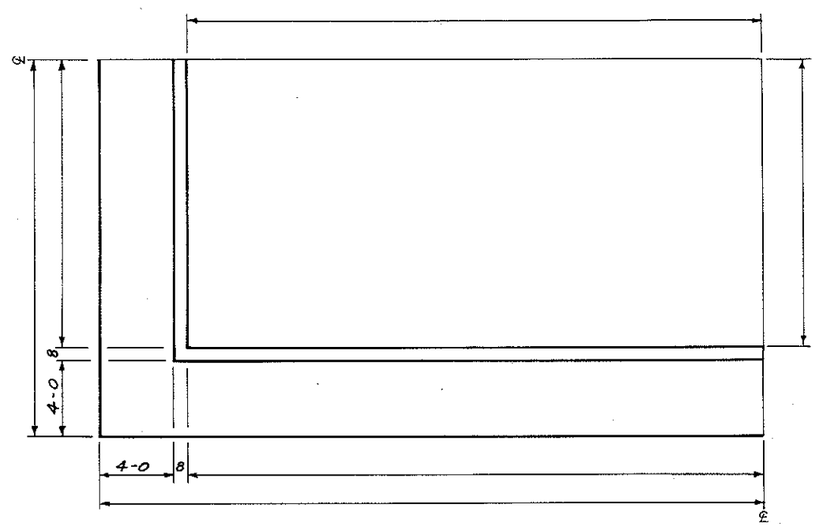

PLAN

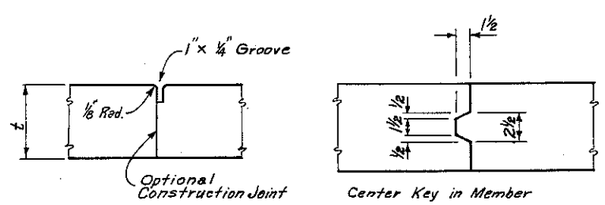

SLAB JOINT

SHEAR KEY DETAIL

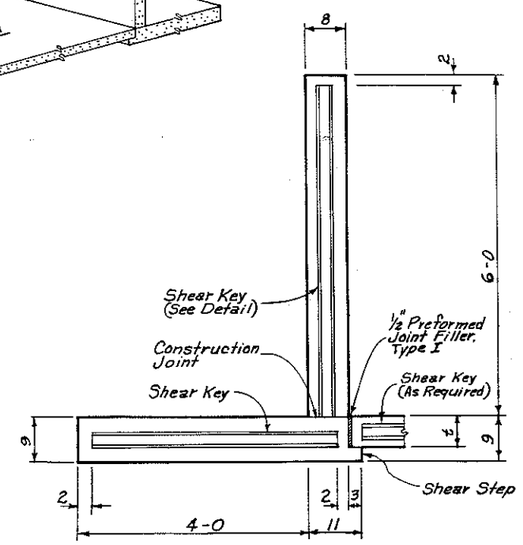

SIDEWALL, SLAB AND EXPANSION JOINT DETAILS

With No Ramp, t = 4" - Use 1"x¼" Grooved Slab Joints
With Ramp, t = 6" - Use Shear Key in Slab Joints

NOTES: 1. Paint Keyed Sidewall and Slab Joints and Area of Shear Step Under Slab with Bituminous Paint to Prevent Bonding of Concrete.
2. Use Rough Finish on Construction Joint to Facilitate Bonding of Concrete.

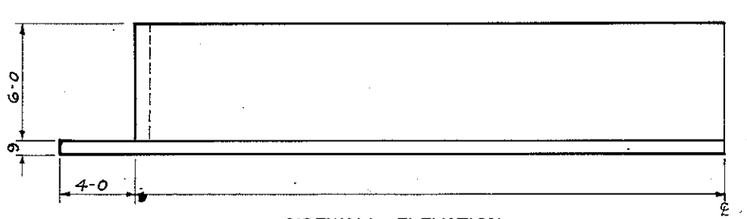

SIDEWALL ELEVATION

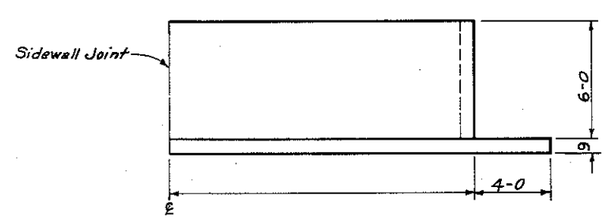

ENDWALL ELEVATION

HOLDING TANK
(Not to Scale)

0 2 4 6 8
SCALE IN FEET

w or no

___ x ___ / ___ RAMP SECTION

OPEN TOP AGRICULTURAL WASTE STORAGE TANK
STRUCTURAL DETAILS - HOLDING TANK

U.S. DEPARTMENT OF AGRICULTURE
SOIL CONSERVATION SERVICE

DESIGNED	DATE	APPROVED BY
DRAWN		TITLE
TRACED		TITLE
CHECKED		SHEET No. 1 of ___ / DRAWING NO.

PLAN NO. SNTC-AWST-1		
Designed QKM 11-81	Drawn EAK 11-81	Checked WHL 2-82
4 Sheets /w Ramp	2 Sheets /no Ramp	

STANDARDIZED DESIGN
Must be adapted to specific site. Refer to Instructions for Use and Design Assumptions.

SCS-ENG-314 (Rev. 7-71)

Clear All | Print

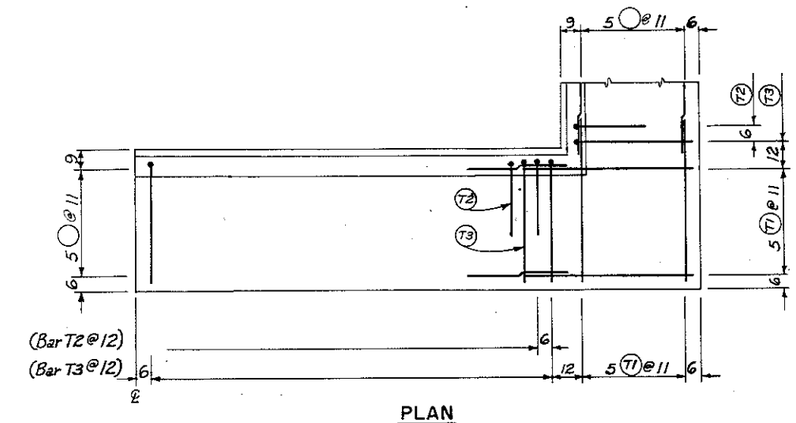

PLAN

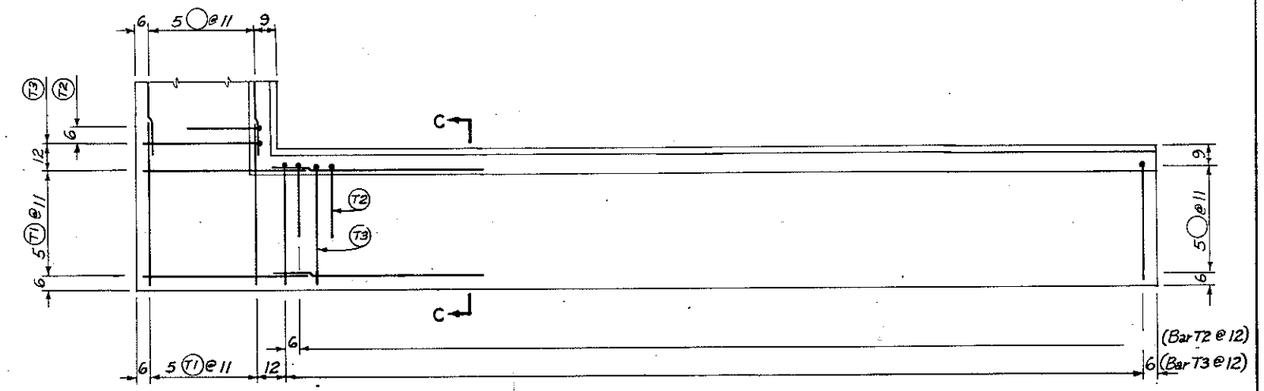

PLAN

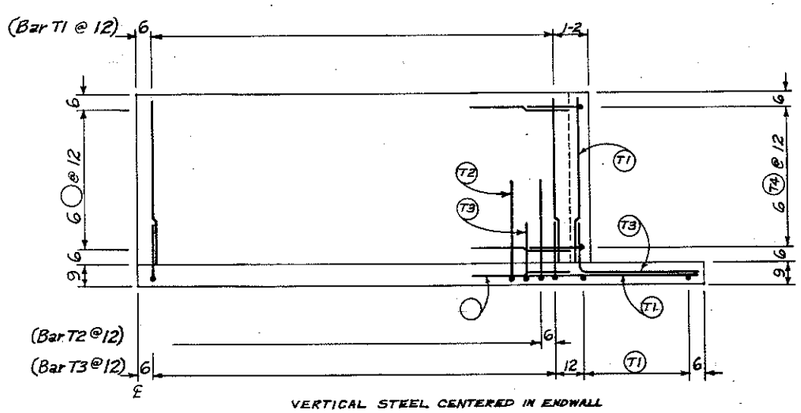

VERTICAL STEEL CENTERED IN ENDWALL

ELEVATION

HOLDING TANK ENDWALL

(Not to Scale)

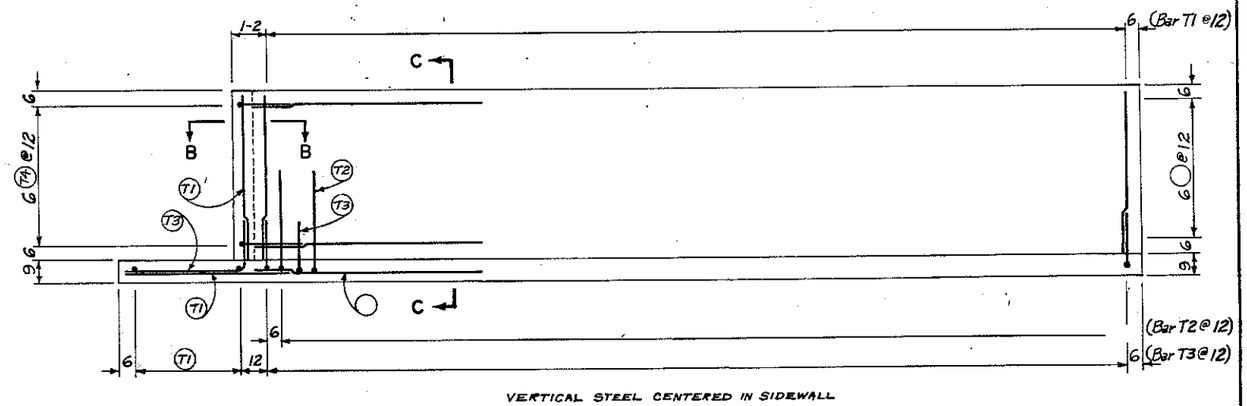

VERTICAL STEEL CENTERED IN SIDEWALL

ELEVATION

HOLDING TANK SIDEWALL

(Not to Scale)

NOTE: Spliced Bars Shall be Lapped a Minimum of 30 Bar Diameters.

4" Thickness of Sand or Sand-Gravel Mixture (2" Maximum Size) Required for Slab Bedding. To Insure Compaction, Thoroughly Wet Bedding Material 24 Hours Prior to Placing the Slab. Then Sprinkle Lightly Immediately Before Pouring.

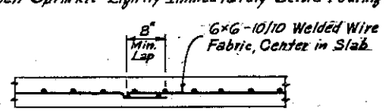

SLAB DETAILS

STEEL SCHEDULE-HOLDING TANK

No.	Qty.	Lgth.	Total Length	Size	Type	A	B
T1		5-10		4	1		
T2		6-1		5	2	3-3	2-10
T3		5-10		4	2	1-8	4-2
T4		3-4		4	2	1-8	1-8

Leg A Vertical on Bars T2 and T3
All Bars Except Bar T2 are Size 4

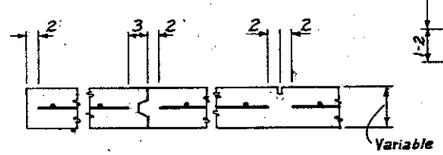

MINIMUM EDGE CLEARANCES

QUANTITIES OF MATERIALS-HOLDING TANK

Steel Reinforcement.

#4 Bars		ft.	lbs. (0.668 lbs./ft.)
#5 Bars		ft.	lbs. (1.043 lbs./ft.)
Welded Wire Fabric		sq. ft.	lbs. (0.210 lbs./sq. ft.)
	TOTAL =		lbs.
Total Bedding Material			cu. yds.
Total Class 3000 Concrete			cu. yds.

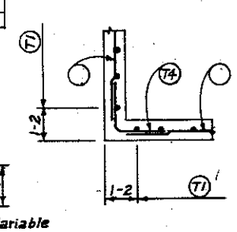

SECTION B-B

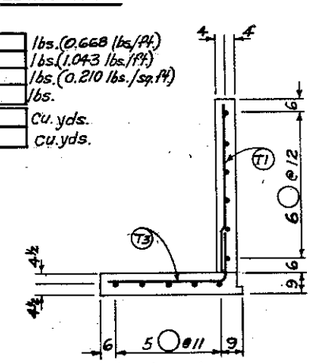

Bar T3 Alternates w/Bar T2

SECTION C-C

TYPE 1 TYPE 2

BAR TYPES

0 1 2 3 4 5 6
SCALE IN FEET

W or no

___ x ___ / ___ RAMP SECTION

OPEN TOP AGRICULTURAL WASTE STORAGE TANK

STEEL PLACEMENT - HOLDING TANK

U.S. DEPARTMENT OF AGRICULTURE

SOIL CONSERVATION SERVICE

DESIGNED	DATE	APPROVED BY	
DRAWN		TITLE	
TRACED		TITLE	
CHECKED		SHEET No. 2 of	DRAWING NO.

SCS-ENG-314 (Rev. 7-71)

PLAN NO. SNTC-AWST-I			
Designed QKM 11-81	Drawn EAK 11-81	Checked WHL 2-82	
4 Sheets /w Ramp	2 Sheets /no Ramp		

11-82

Clear All Print

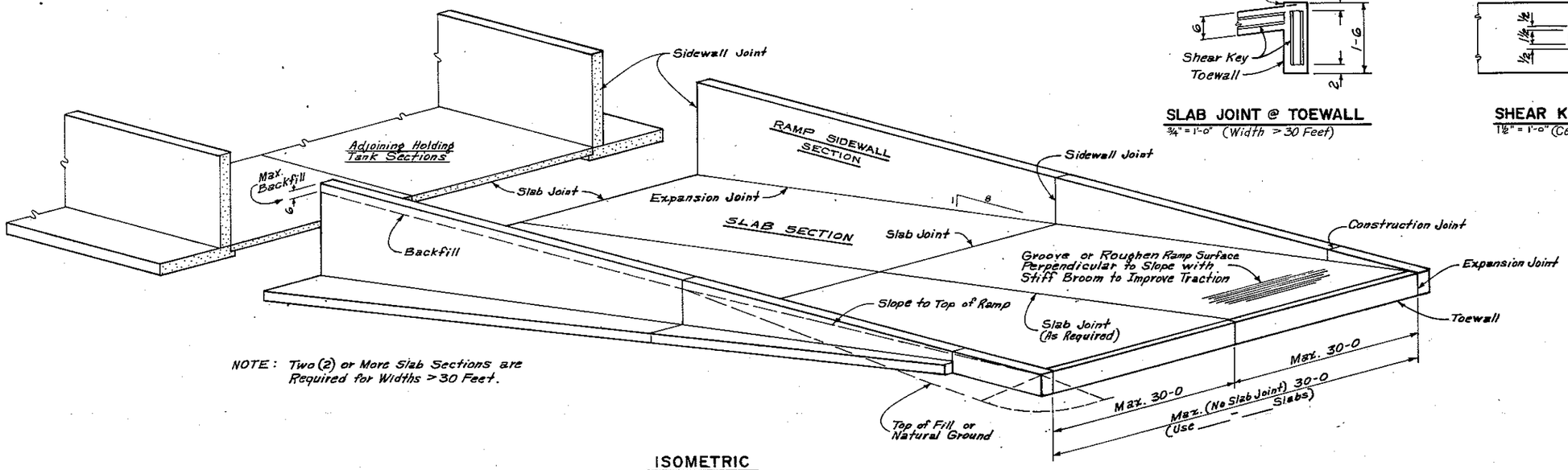

NOTE: Two (2) or More Slab Sections are Required for Widths > 30 Feet.

ISOMETRIC

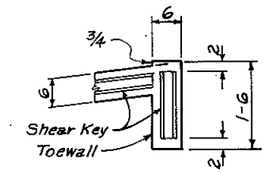

SLAB JOINT @ TOEWALL

3/4" = 1'-0" (Width > 30 Feet)

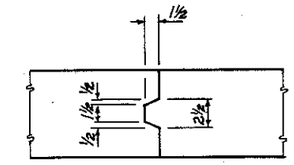

SHEAR KEY DETAIL

1½" = 1'-0" (Center Key in Member)

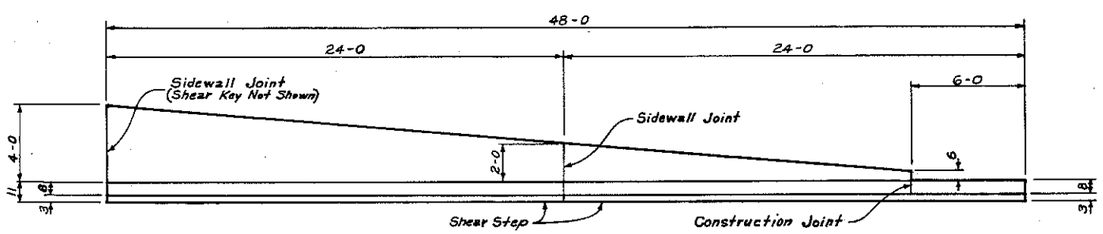

PLAN

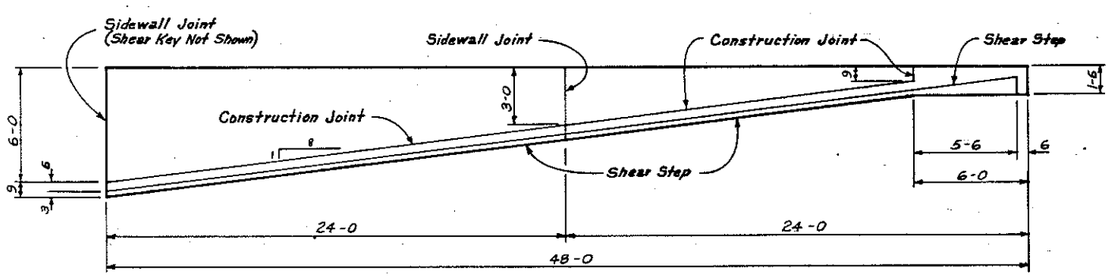

INSIDE ELEVATION

RAMP SIDEWALL

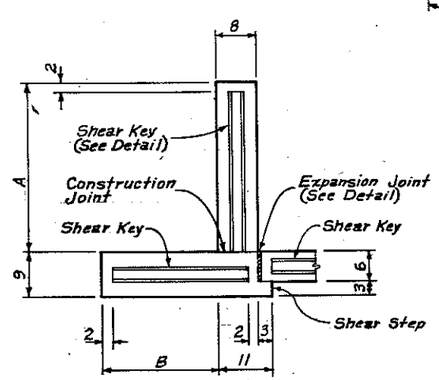

SIDEWALL AND SLAB JOINT DETAILS

3/4" = 1'-0"

A = 6-0 & B = 4-0 at Bottom of Ramp
A = 3-0 & B = 2-0 at Mid-Height of Ramp

NOTES: 1. Paint Sidewall and Slab Joints with Bituminous Paint to Prevent Bonding of Concrete.
2. Use Rough Finish on Construction Joint to Facilitate Bonding of Concrete.

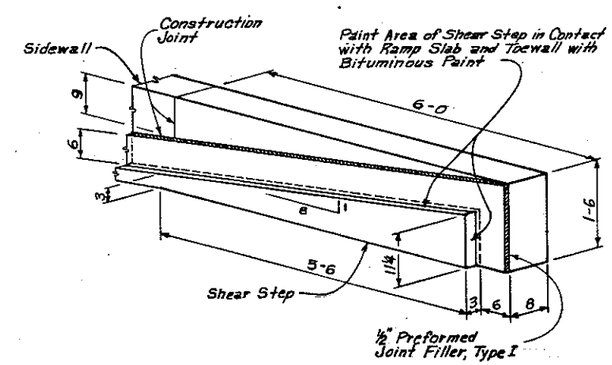

EXPANSION JOINT DETAILS

(Slab Removed)

0 2 4 6 8
SCALE IN FEET

OPEN TOP AGRICULTURAL WASTE STORAGE TANK
STRUCTURAL DETAILS - RAMP SECTION

U.S. DEPARTMENT OF AGRICULTURE
SOIL CONSERVATION SERVICE

DESIGNED	DATE	APPROVED BY	
DRAWN		TITLE	
TRACED		TITLE	
CHECKED		SHEET No. 3 of 4	DRAWING NO.

SCS-ENG-314 (Rev. 7-71)

PLAN NO. SNTC-AWST-1					
Designed	QKM 11-81	Drawn	EAK 11-81	Checked	WHL 2-82
4 Sheets /w Ramp		2 Sheets /no Ramp			

Clear All Print

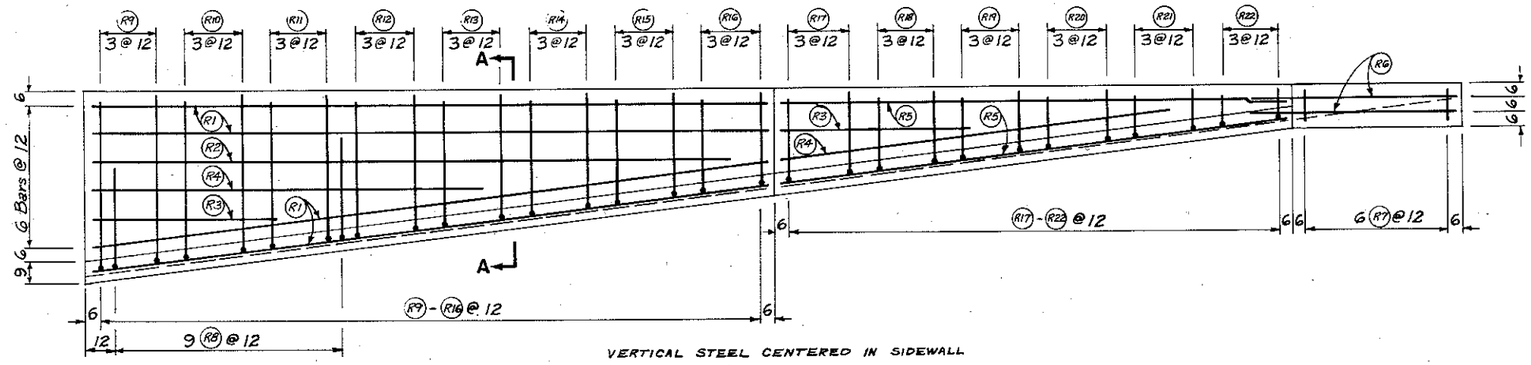

ELEVATION

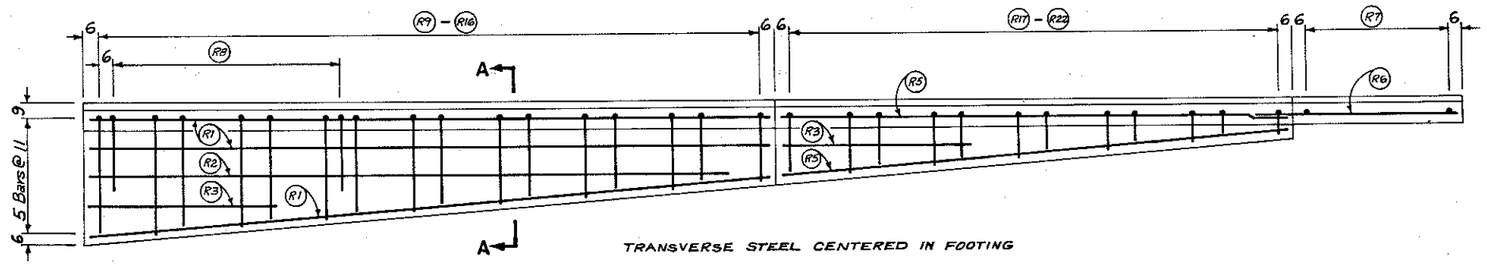

PLAN

RAMP SIDEWALL

QUANTITIES OF MATERIALS-RAMP SECTION

Steel Reinforcement				
#4 Bars	1191.5	ft.	796	lbs.(0.668 lbs./ft.)
#5 Bars	109.5	ft.	114	lbs.(1.043 lbs./ft.)
Welded Wire Fabric		sq.ft.		lbs.(0.210 lbs/sq.ft.)
TOTAL =				lbs.
Total Bedding Material				cu.yds.
Total Class 3000 Concrete				cu.yds.

STEEL SCHEDULE-RAMP SIDEWALLS

No.	Qty.	Lgth.	Total Length	Size	Type	A	B
R1	12	23-7	283-0	4	Str.		
R2	4	22-3	89-0	4	Str.		
R3	8	6-6	52-0	4	Str.		
R4	4	13-9	55-0	4	Str.		
R5	8	17-8	141-4	4	Str.		
R6	4	7-3	29-0	4	Str.		
R7	12	1-2	14-0	4	Str.		
R8	18	6-1	109-6	5	2	3-3	2-10
R9	6	9-9	58-6	4	2	5-10	3-11
R10	6	9-1	54-6	4	2	6-5	3-8
R11	6	8-6	51-0	4	2	5-1	3-5
R12	6	7-10	47-0	4	2	4-8	3-2
R13	6	7-3	43-6	4	2	4-4	2-11
R14	6	6-7	39-6	4	2	3-11	2-8
R15	6	6-0	36-0	4	2	3-7	2-5
R16	6	5-4	32-0	4	2	3-2	2-2
R17	6	4-10	29-0	4	2	2-11	1-11
R18	6	4-2	25-0	4	2	2-6	1-8
R19	6	3-7	21-6	4	2	2-2	1-5
R20	6	2-11	17-6	4	2	1-9	1-2
R21	6	2-4	14-0	4	2	1-5	0-11
R22	6	1-8	10-0	4	2	1-0	0-8

All Bars Except Bar R8 are Size 4

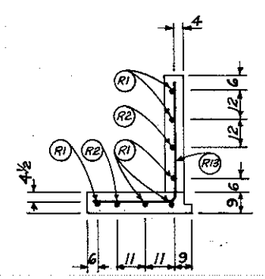

SECTION A-A

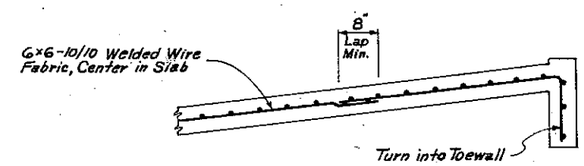

4" Thickness of Sand or Sand-Gravel Mixture (2" Maximum Size) Required for Slab Bedding. To Insure Compaction, Thoroughly Wet Bedding Material 24 Hours Prior to Placing the Slab. Then Sprinkle Lightly Imediately Before Pouring.

SLAB DETAILS

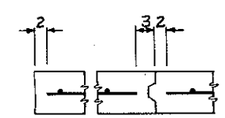

MINIMUM EDGE CLEARANCES

TYPE 1 TYPE 2

BAR TYPES

0 1 2 3 4 5 6
SCALE IN FEET

OPEN TOP AGRICULTURAL WASTE STORAGE TANK
STEEL PLACEMENT - RAMP SECTION

U.S. DEPARTMENT OF AGRICULTURE
SOIL CONSERVATION SERVICE

DESIGNED	DATE	APPROVED BY	
DRAWN		TITLE	
TRACED		TITLE	
CHECKED		SHEET No. 4 of 4	DRAWING NO.

SCS-ENG-314 (Rev. 7-71)

PLAN NO. SNTC-AWST-1					
Designed	QKM 11-81	Drawn	EAK 11-81	Checked	WHL 2-82
4 Sheets /w Ramp		2 Sheets /no Ramp			