29N603

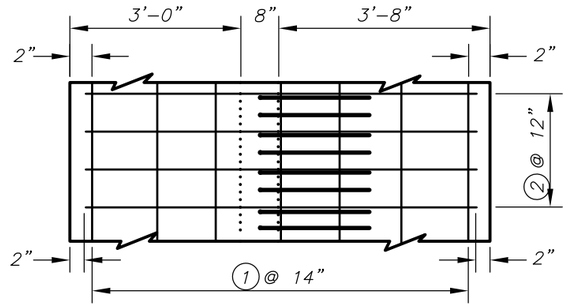

PLAN OF BASE VIEW

Notes:

1. The dimension shown is the clear distance from face of concrete to closest edge of reinforcing bar. Bar spacing is center to center of bars.
2. Bars 2 and 3 shall be placed with 4 1/2" clear distance to the top of the footing.
3. The 6 bars are located in corners and tied directly to 5 (horizontal) bars in wall.
4. To avoid duplicating reinforcing steel, the 2 bars at corners may be omitted as approved by engineer.
5. The 1 bars at corners shall extend within 1 1/2 inches of outside of footing.
6. Bars 3, 4 and 5 shall be placed in the center of the 8 inch wall.
7. Horizontal footing and floor bars 1 and 8 shall be field bent as needed to install sump.
8. Full depth and dimension of sump shall extend to inside edge of retaining wall footing. Grade floor into sump to insure drainage.
9. If Grade 60 steel is used, the #7 3 bars can be replaced by #6 bars and the #6 2 bars can be replaced by #5 bars.

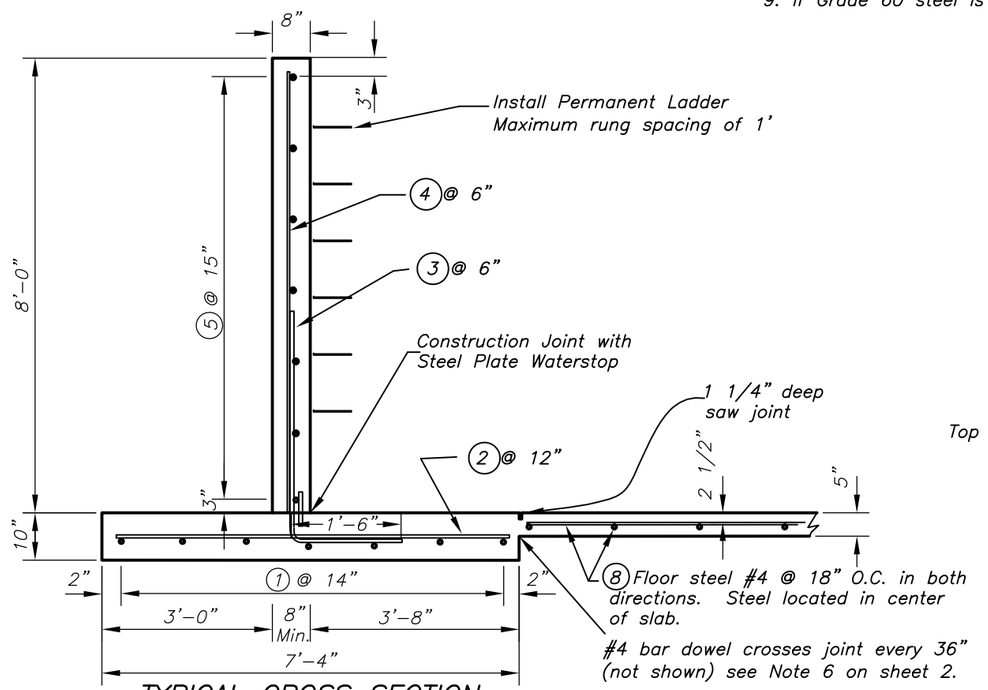

TYPICAL CROSS SECTION

not to scale

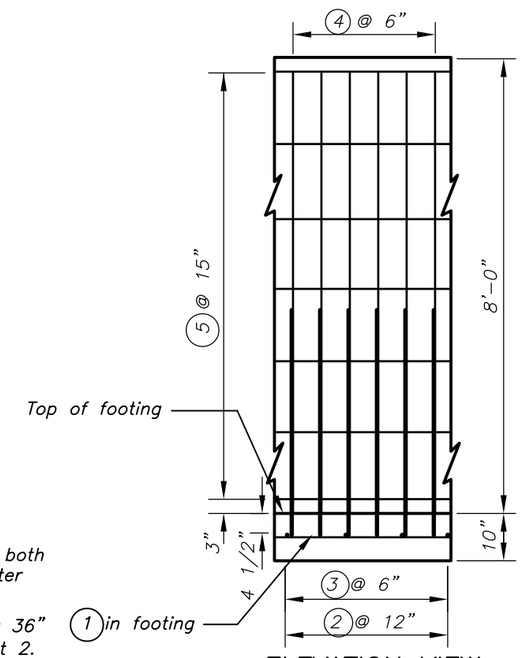

ELEVATION VIEW

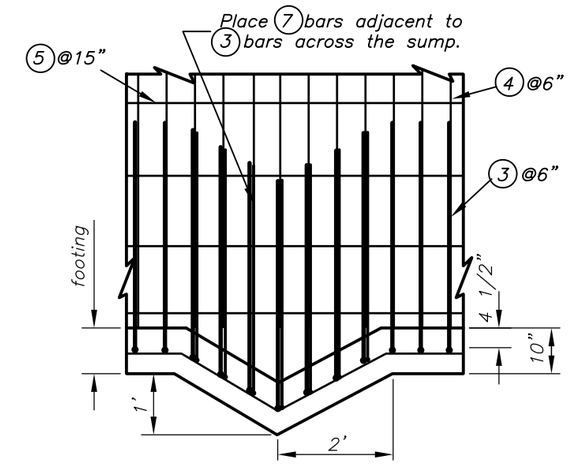

ELEVATION VIEW OF SUMP

ESTIMATED QUANTITIES	
Concrete	
Walls	CY
Floor	CY
Total	CY
Rebar	
#4–Floor	LF
#5–Walls/Footing	LF
#6–Walls/Footing	LF
#7–Walls/Footing	LF
Drainpipe	LF
Pipe Bedding	CY
Filter Fabric	SY
Drainfill	CY

BAR SCHEDULE

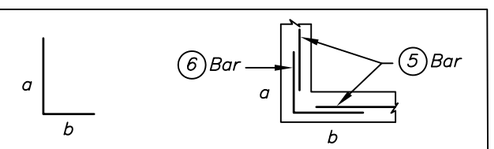

	Type 1			Type 2		Type 3		
MARK	SIZE	SPACE	QUANTITY	LENGTH	TOTAL LENGTH	TYPE	a	b
1	#5	14"		20'		1	---	---
2	#6	12"		7'–0"		1	---	---
3	#7	6"		4'–6"		2	3–0	1–6
4	#5	6"		7'–9"		1	---	---
5	#5	15"		20'		1	---	---
6	#5	15"		5'–0"		3	2–6	2–6
7	#6	6"		5'–3"		2	3–9	1–6
8	#4	18"		20'		1	---	---
Dowel	#4	36"		2'–6"		1	---	---

Revised 08/00

Sheet 1 of 2

DRAFT

NOT FOR CONSTRUCTION

Date

Designed

Drawn

Checked

Approved

8 FOOT REINFORCED CONCRETE WALL
FOR ANIMAL WASTE STORAGE

United States Department of Agriculture
NRCS Natural Resources Conservation Service

File Name

Drawing Name
29–N–603

Sheet of

Toggle Draft Off